Mode Switch
SSS-Custom-made Mechanism Position Detective Type

[] Features

<>Superb reliability of mechanical sliding contacts type.
<>Wide variations with low profile and gear incorporated types.
<>Custom-made of the output mode is possible and please fell free to contact us beforehand.

[] Applications

<>VTR, DVC
<>Position detection of an output code

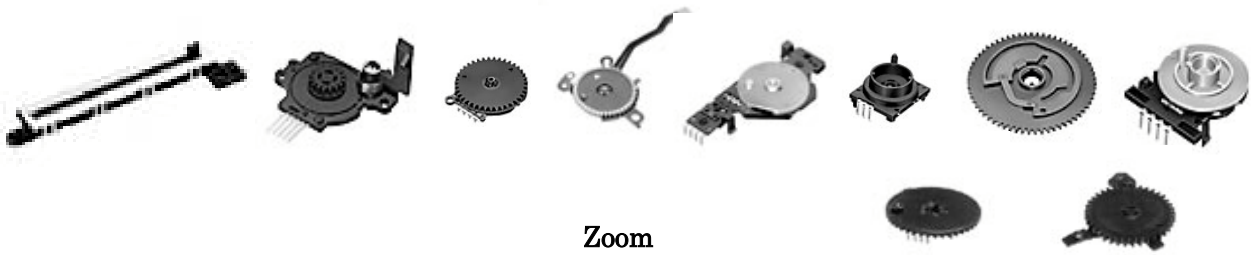

Zoom

[] Product number

SSS – MD - [ ] - [ ]

- Lever style and others
- Custom-made mode position detector type
- Type No
- Detector switch

[] Products Line / Typical Specifications

No	Products No.	Ratings	Contact resistance	Rotational torque Operating force	Number of bits	Operating life (cycles)
1	SSS-26MDAU	1mA 5V DC	500 milliohm max.	0.4 N	3	60,000
2	SSS-29MD-1	1mA 5V DC	1 ohm max.	0.49 N-cm	3	10,000
3	SSS-35MD	1mA 5V DC	1 ohm max.	0.34 N-cm	3	50,000
4	SSS-38MD-3	0.1mA 5V DC	20 ohm max.	3.92 N-cm	3	10,000
5	SSS-40MD	0.5mA 5V DC	1 ohm max.	0.49 N-cm	3	100,000
6	SSS-43MD	1mA 5V DC	1 ohm max.	0.98 N-cm	6	100,000
7	SSS-44MD	0.038mA 1.8V DC	1 ohm max.	0.34 N-cm	3	50,000
8	SSS-45MD-2	1mA 5V DC	500 milliohm max.	1.3 N-cm	3	100,000
9	SSS-54MD	0.1mA 5V DC	20 ohm max	0.98 N-cm	3	100,000
10	SSS-58MD	0.038mA 1.8V DC	1 ohm max	0.34 N-cm	3	50,000

Dimensions

Unit : mm

No	Style
1	SSS-26MDAU 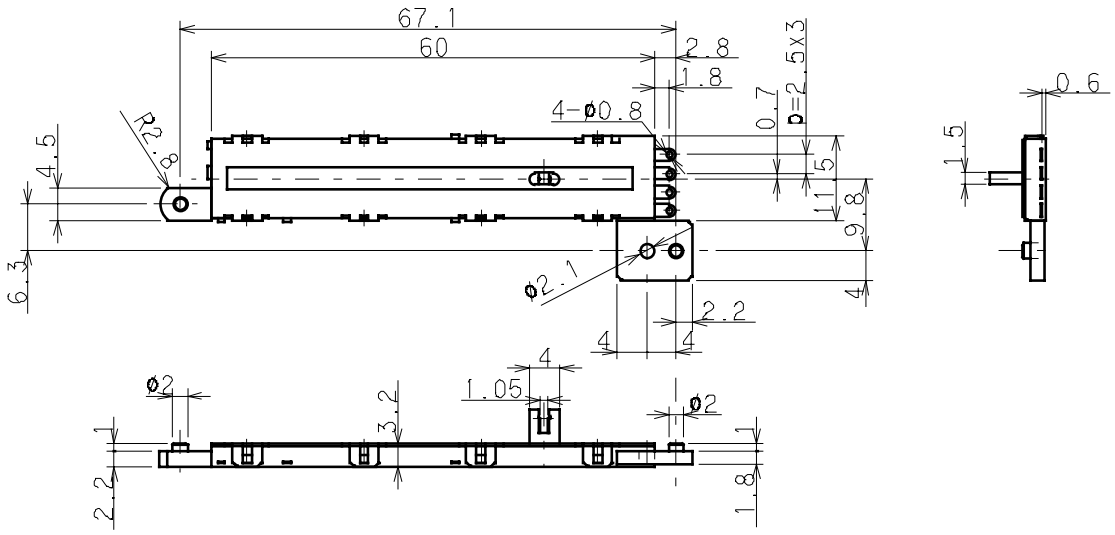 DXF data is not exhibited as products are all custom-made
2	SSS-29MD-1 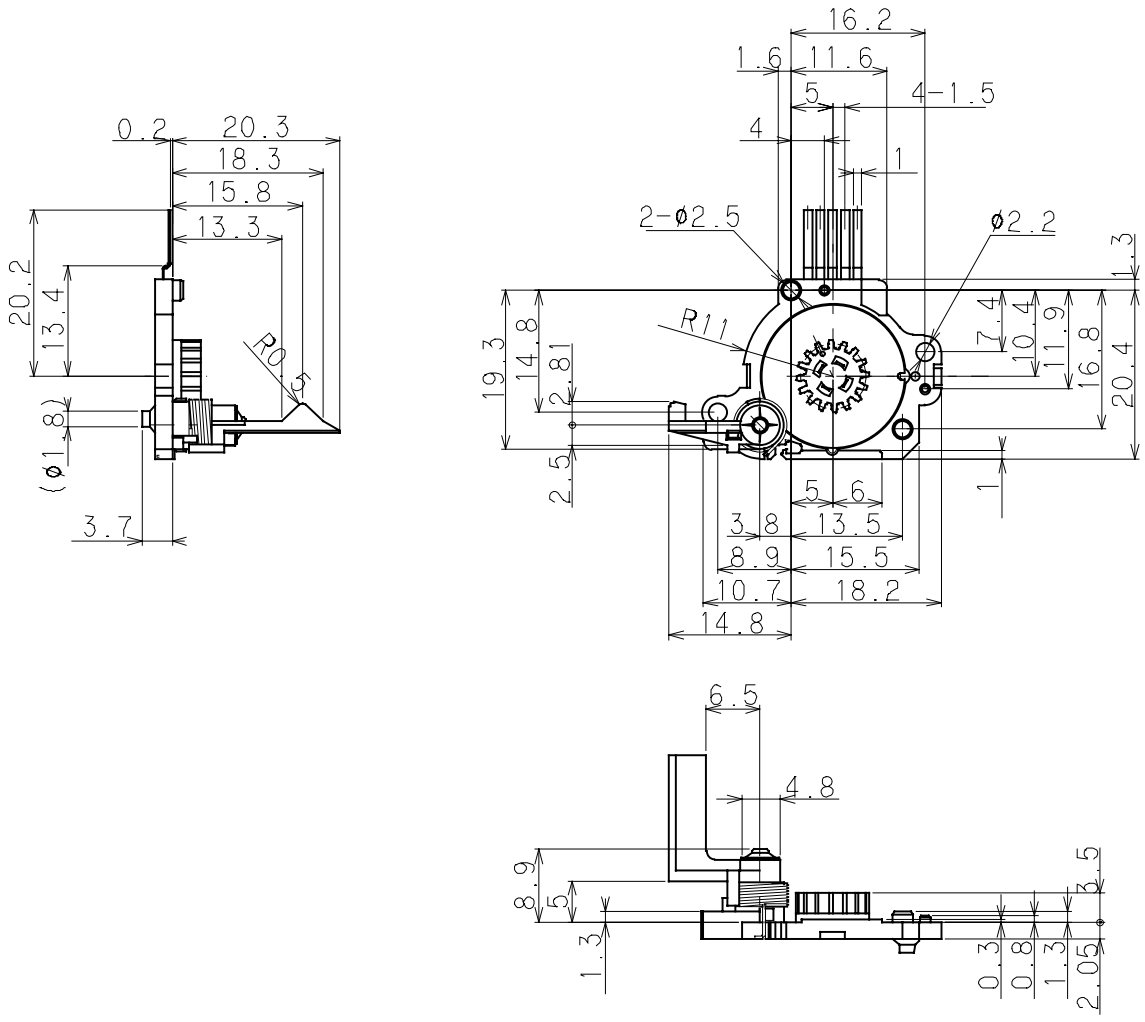 DXF data is not exhibited as products are all custom-made

[] Dimensions Unit : mm

No	Style
3	SSS-35MD 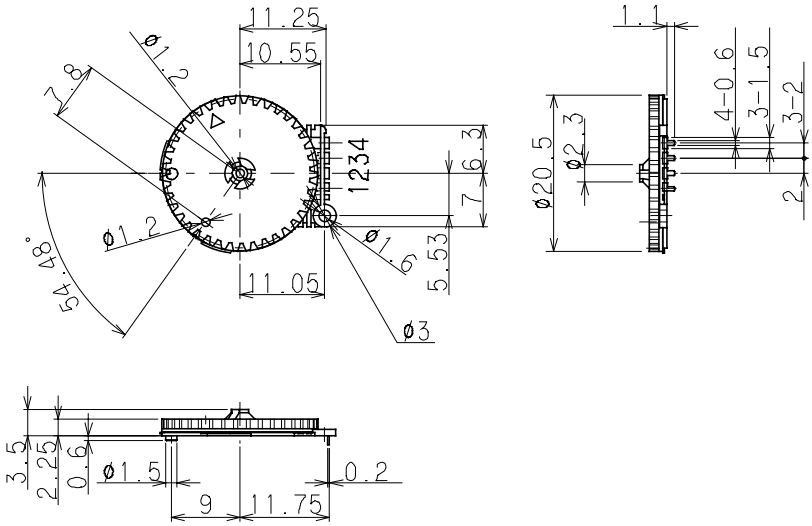 DXF data is not exhibited as products are all custom-made
4	SSS-38MD-3 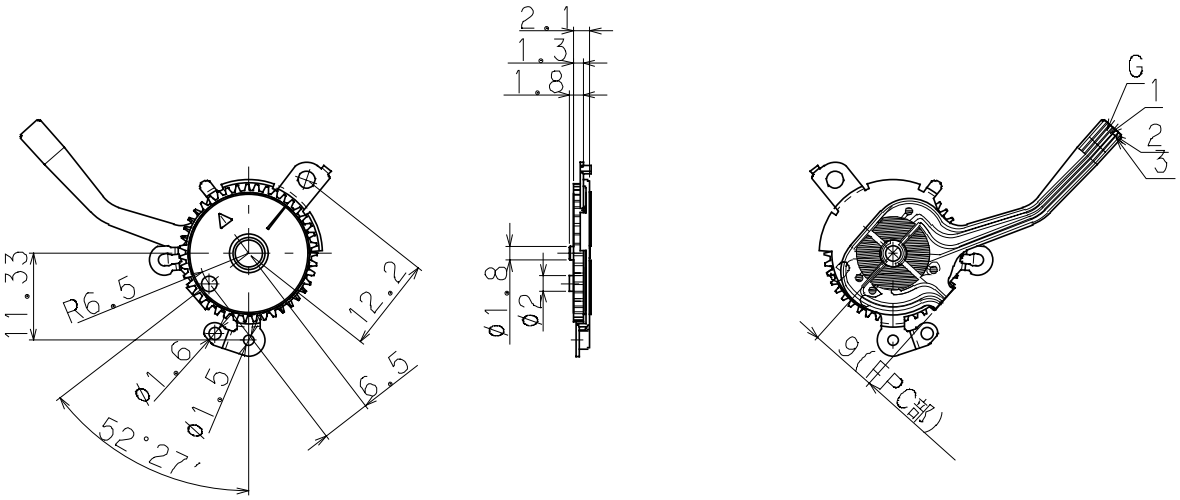 DXF data is not exhibited as products are all custom-made
5	SSS-40MD 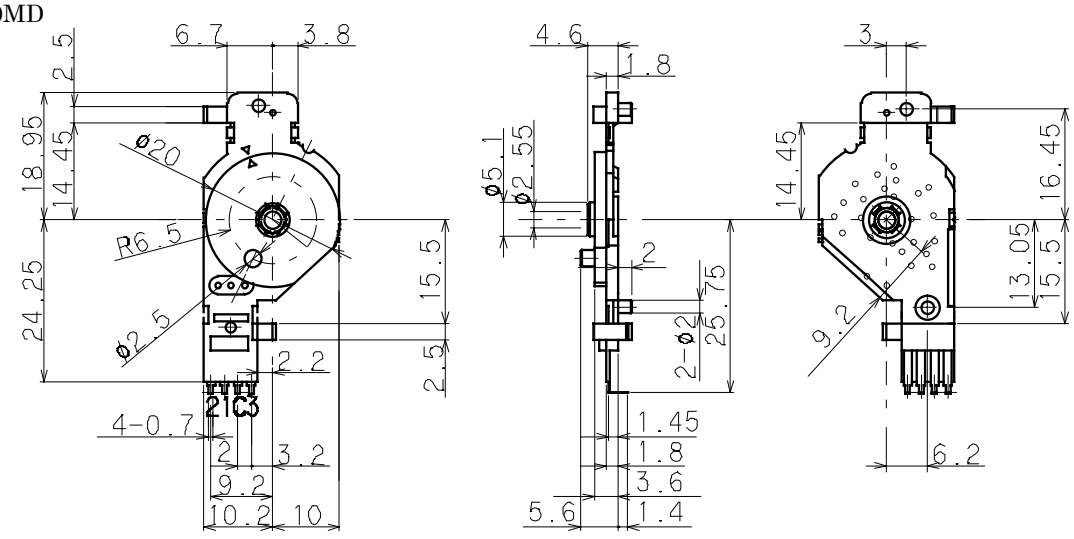 DXF data is not exhibited as products are all custom-made

Dimensions

Unit : mm

No	Style
6	SSS-43MD 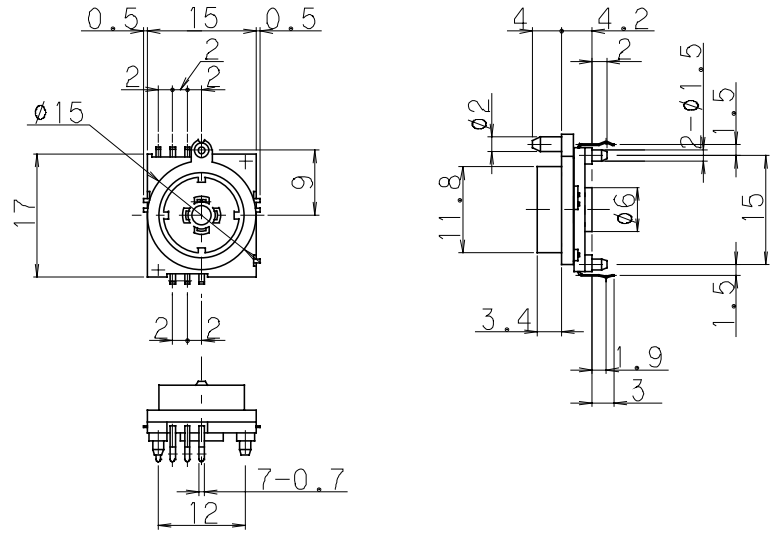 DXF data is not exhibited as products are all custom-made
7	SSS-44MD 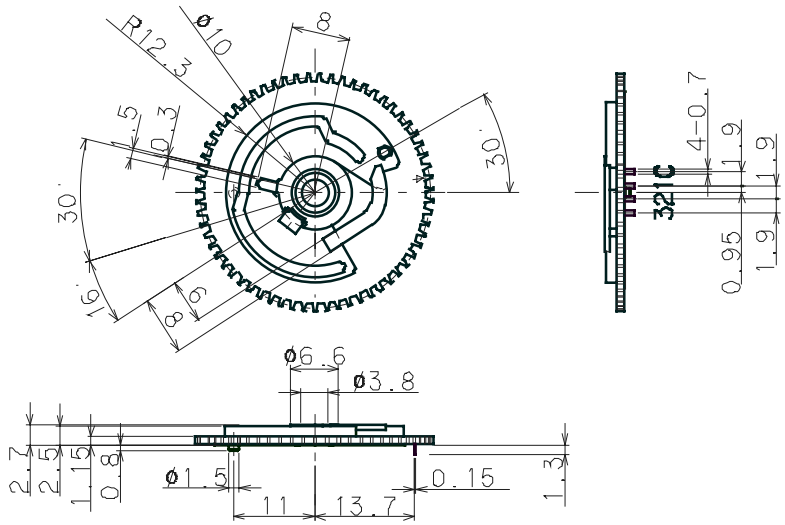 DXF data is not exhibited as products are all custom-made
8	SSS-45MD-2 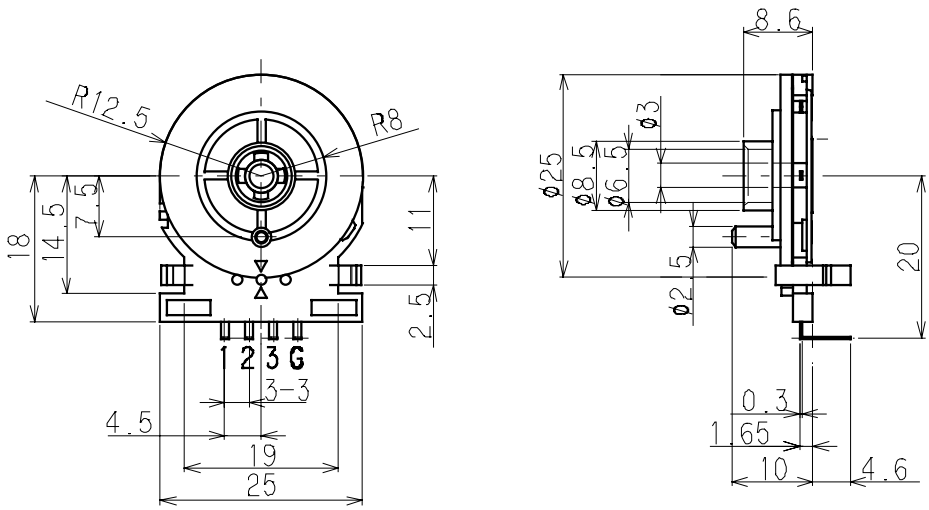 DXF data is not exhibited as products are all custom-made

[] Dimensions Unit : mm

No	Style
9	SSS-54MD 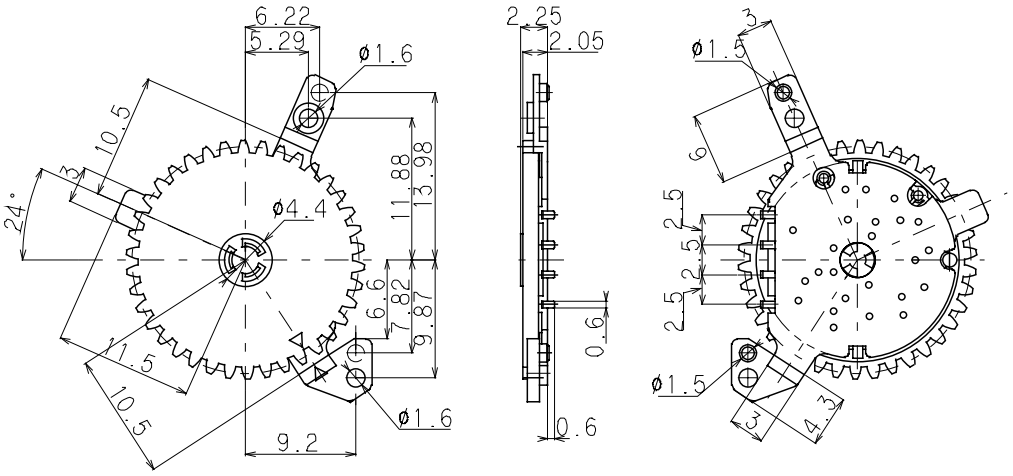 DXF data is not exhibited as products are all custom-made
10	SSS-58MD 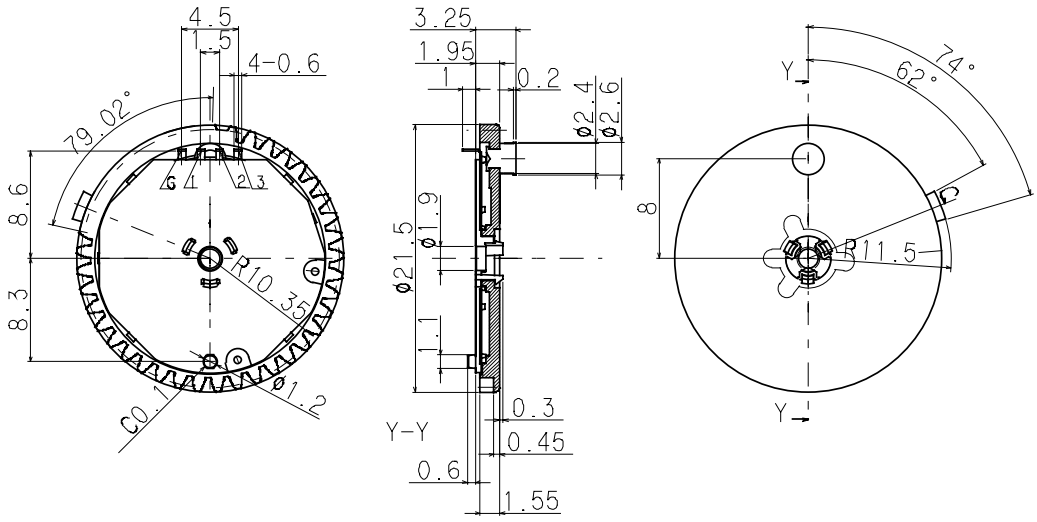 DXF data is not exhibited as products are all custom-made

[] Notes

1 The appearance and specifications of the product may be modified to improve its performance without prior notice.
2 This catalog shows only outline specifications. When using the product, please obtain formal specifications.
3 Please see appendix [Cautions in Using Switches].
4 This lever switch is not washable.
5 Soldering shall be done with lever at free position and take care not to attach flux on plastic portion.
6 Note that if the stress is applied to the terminals during soldering, they might cause deformation and defects in electrical performance.
7 In manual soldering, consideration should be given to apply the soldering iron to the tip of the terminal so that unusual pressure is not applied to the terminal
8 In case circuit and software design consideration against chattering and bouncing shall be taken as below.
  Read a few times (Ex. 5ms for 5 times)
  Set delay time.
  Set integral circuit.
9 As to threshold voltage, center setting is recommended.
10 Care shall be taken not to apply stress to the body of switch as it may affect the performance.
11 Please confirm the performance on actual operation by simulation with actual environment environments for high reliability.